AGER®

19” RACK CABINET SOLUTIONS

SOUNDPROOF SERIES

SERVER RACKS | NETWORK CABINETS | DATA CENTER SOLUTIONS

ENGINEERING SOLUTIONS FOR CRITICAL SYSTEMS

CE | RoHS COMPLIANT | ISO 9001:2015 | RELIABLE PRODUCTION

FREE STANDING 19’’ SOUNDPROOF CABINET

AGER SOUNDproof Floor Standing Cabinets are designed to reduce the noise created by the active equipment inside the cabinet. While realizing a sound reduction around the perimeter of the cabinet, the wood cladding exterior visually blends into the working environment. The melamine-coated chipboard skin is available in a choice of options including Maple, Oak and Walnut (Oak is the standard configuration).

Color Options

CABINET FEATURES

The cabinet is designed with a width of W750 mm and depth of D1130 mm, meeting all the needs of data network cabling applications, server and storage applications.

In the office environment, the noise and sound pollution generated by active equipment affects office workers and reduces their performance. For such reasons; the product range has been developed with a superior sound reduction performance for various classrooms, offices, banks, hospitals, laboratories, hotels, meeting rooms, conference rooms.

To reduce the noise level, the cabinet is equipped with a silent fan ventilation system with a maximum noise level of 29-30dB.

SOUNDproof cabinets are supplied as standard with a decorative wood applied front cover and top hat design. Side and rear panels are metal. All are lockable.

Standard shipment configuration includes heavy duty metal adjustable leg assemblies, heavy duty wheel set.

Top Cover; 30 mm thick Melamine coated fiberboard. For safety, the top cover is fixed from inside the cabinet, it cannot be removed from the outside. The top cover can also be used as office furniture with its robust and safe structure. (Photocopier, printer, file holder etc. such as coffee table)

CABINET STRUCTURE

Loading capacity is max 750kg.

Cable Entry; W= 316 mm x D= 100 mm double brushed cable entry hall at the rear of the sub-frame allows the sound to come out at a minimum level with its double layer feature. There are 316x70mm brushed cable passage halls on the front right and left parts of the sub-frame.

Front Door; Vertical double opening structure, 18 mm thick melamine coated chipboard cladding in metal frame, “O” type lock on the upper part, handles for easy opening on the right and left in the middle part.

Thermometer; The thermometer on the front door allows the temperature inside the cabin to be seen from the outside.

Rear door; The rear door is a one-piece monoblock welded metal, has a lever lock system, double-layered and sound-absorbing insulation material on both surfaces. Silent 3-way fan module is mounted on the rear door, hot air discharge is provided through holes on both sides of the rear door.

Side panel; It is a single piece metal structure that can be locked with O type lock and two bolt locks. There is sound absorbing insulation material inside the removable side panels. When the side panels are removed, additional inner side panels are fixed and covered with sound absorbing insulation material.

17U Soundproof rack cabinet has 1x3 thermostat controlled fan module.

32U Soundproof rack cabinet has 2x3 thermostat controlled fan module.

42U Soundproof rack cabinet has 3x3 thermostat controlled fan module.

PDU PLACEMENT

In 17U, 32U and 42U Soundproof rack cabinets, there are 2 pcs 19” 6 Fused PDUs mounted vertically on the back right and left.

PDU’s mounted vertically on the right and left do not occupy usable space on the mounting upright.

19” mounting uprights;Screen printed U numbering is made from top to bottom or bottom to top. 19” uprights provide high load capacities due to 4 layers of bending and 1.5mm thickness. 19” uprights are made of galvanized steel sheet plate for corrosion resistance. Depths of 19” uprights are adjustable.

Vertical cable management organizers are available in 1set=2 standard configurations on the right and left of the front part.There are 44x60mm hooks mounted on the vertical cable management organizers. There are 50x100 mm brushed cable pass-through holes between the hooks to pull the cable bundles from the front to the back of the cabinet.

Balancing legs, Caster set;Heavy duty metal balancing legs and casters with, without brakes are included in the standard configuration. After the balancing legs are opened, the casters will be deactivated. The cabinet will be in fixed position.

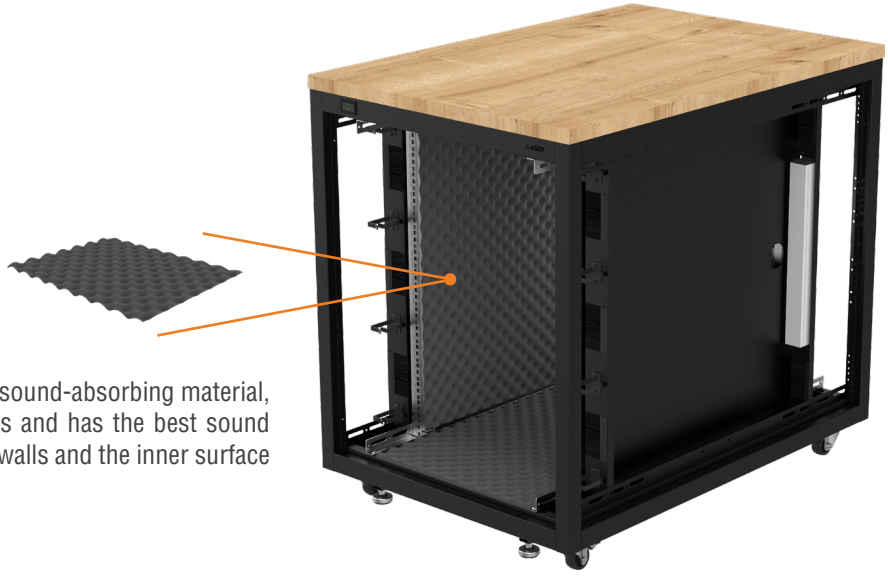

Sound-absorbing insulation material; High density sound-absorbing material, flexible type, air flowable, suitable for drilling holes and has the best sound cutting performance.All doors, panels between the walls and the inner surface of the inner wall are covered with these materials.

INSULATION MATERIAL PROPERTIES

- Specification: Value
- Density: ≥ 70 Kg/m3
- Tensile Strength: >75 kpA
- Tension Capacity:% 130
- Fire Resistance Test Summary Property: Value
- Thickness: From 5 mm to 55 mm in block
- Thermal Conductivity: 0,045 W/m/K.
- Thermal Resistance (regular usage): -30 °C, +100 °C
- Thermal Resistance (short usage): -30 °C, +130 °C

TSE EN 13501 +A1:2013 -04 Fire classifaction of construction products and build elements. (C, s2, d0)

The product is available with a self-adhesive backing and a wide variety surface finishing. The product can be supplied in composite form with lead or polymeric barriers and damping sheets.

FACE MATERIAL
I- PU film : 35µ, black, resistant up to 155 ºC
II-Alu-R : 15µ aluminum , resistant up to 120 ºC; reinforced with mesh
III-PTX60 : 65 g/m2, flame retardant special non-woven with micro-holes, water repellent, resistant up to 90 ºC
IV-FBT 75 : 75 g/m2, flame retardant acoustic special non-woven, resistant up to 110 ºC
V-Fiber : Woven fiberglass , 200 g/m2, resistant up to 550ºC
VI-Aluminum Fiber : Aluminum foil coated Woven fiberglass, 200 g/m2, resistant up to 550ºC
VII – PU film-reinforced : Bi-layer PU film, 50µ, black, resistant up to 155 ºC

BARRIER
I-PROBARRIER : Vinyl, Thickness is 2 mm, Density 3,9 ±2 kg/m² Lead, Thickness is 0,5 mm, Density 7 kg/ m²

BACK SIDE MATERIAL
I-PSA Definition : Solvent Free modified Acrylic with silicone paper (havana) liner

Carrier: Multidirectional polyester mesh Working temperature : -20ºC to + 80ºC

NOISE TESTING

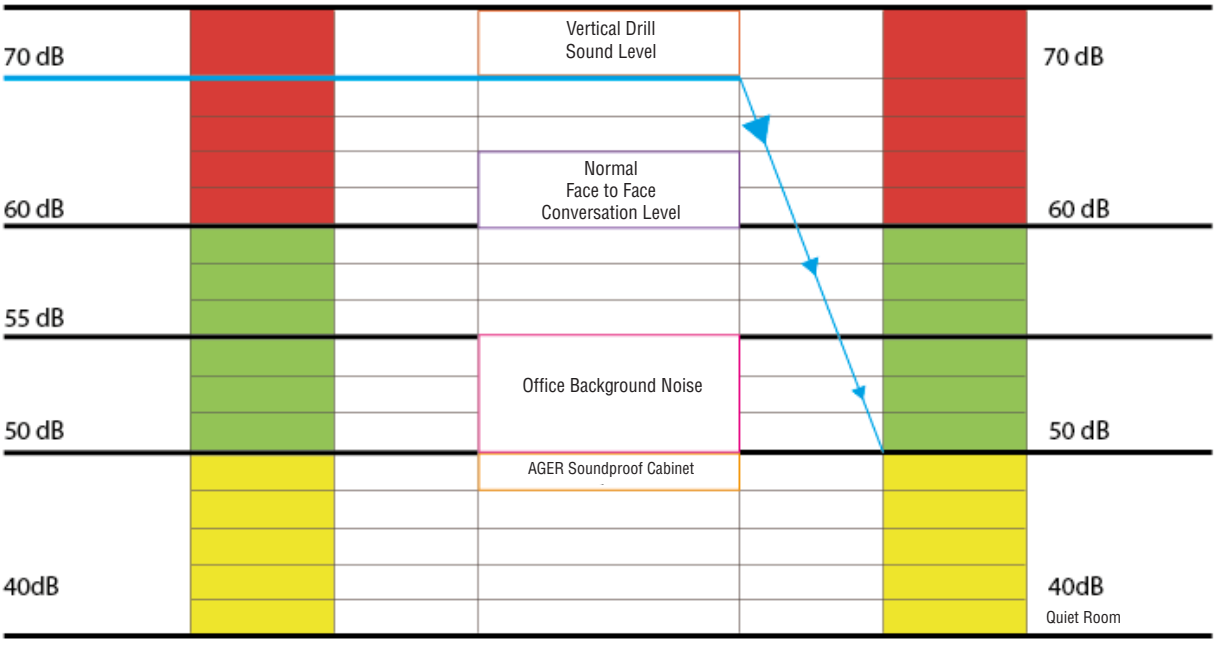

18-21dB noise level reduction at a distance of 1 meter from the cabinet (DWA= 18,5 dB in the test of the SOUNDproof cabinet according to TS EN ISO 11546 standard).

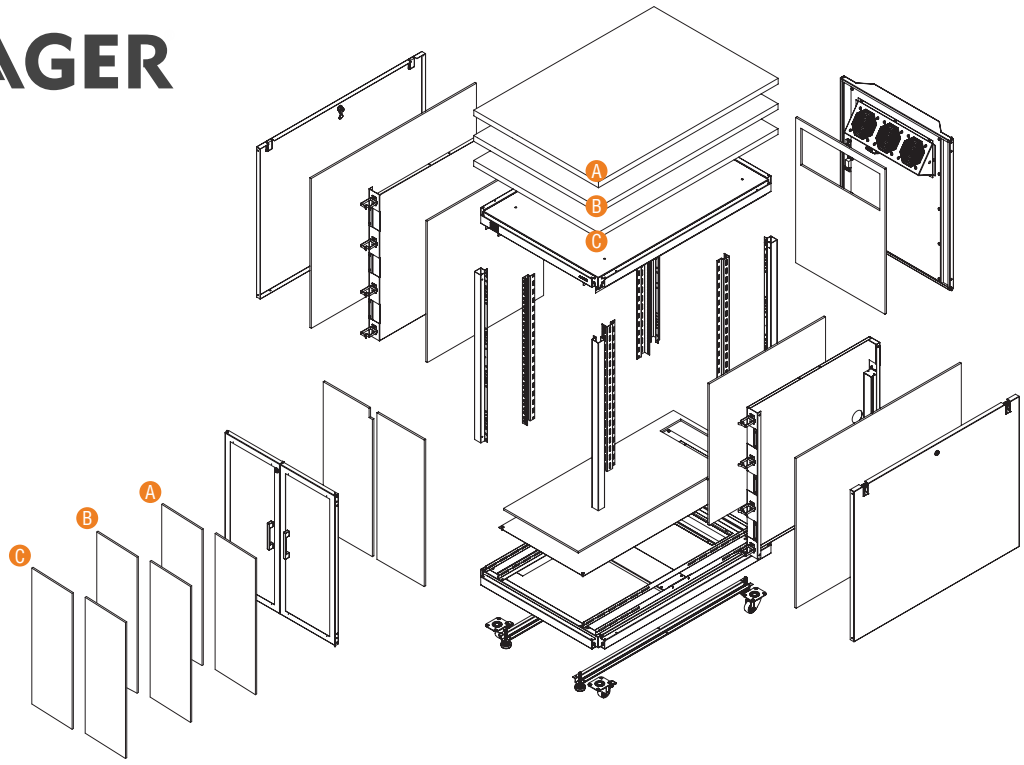

AG-SP17U75113AS1-BBAA-B-M1

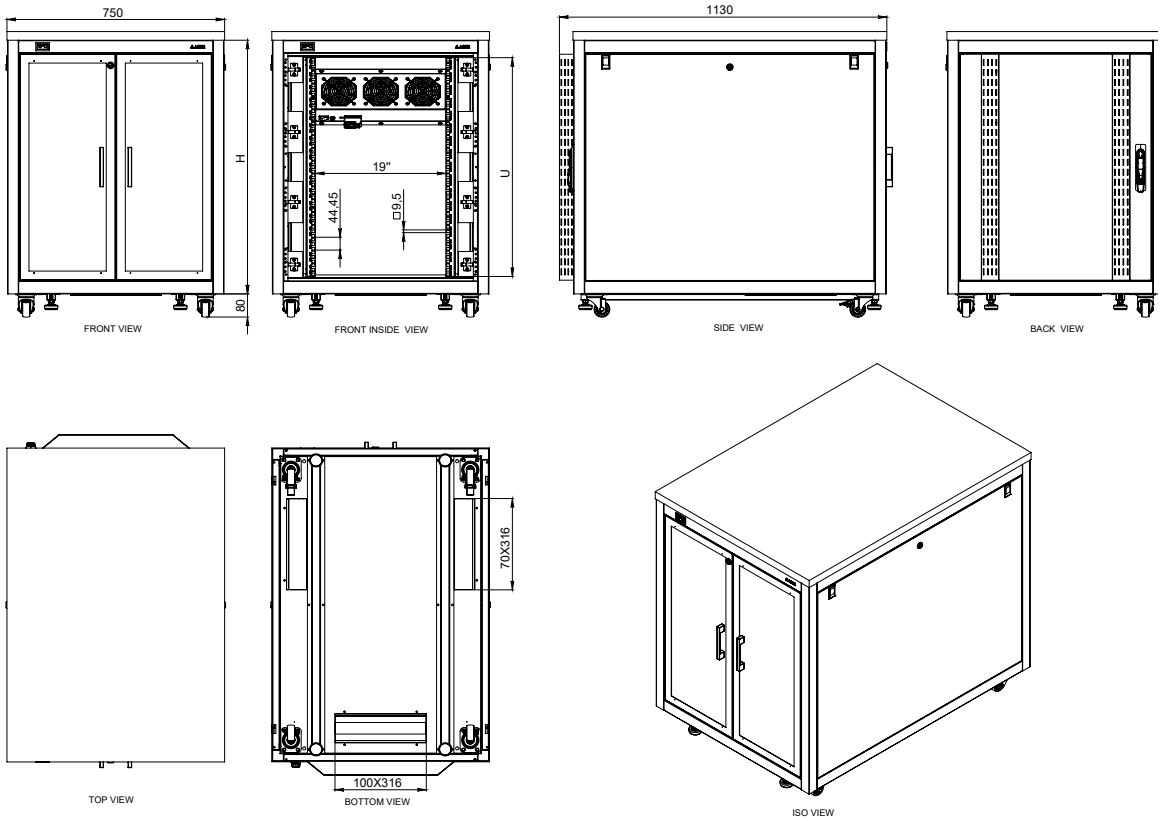

SOUNDProof Free Standing Cabinet					
Product Code	Product Description	U Size	Width (W) (mm)	Depth (D) (mm)	Height (H) (mm)
AG-SP17U75113XS1-BBAA-B-M1	Soundproof Free Standing Cabinet	17U	750	1130	988
AG-SP32U75113XS1-BBAA-B-M1	Soundproof Free Standing Cabinet	32U	750	1130	1655
AG-SP42U75113XS1-BBAA-B-M1	Soundproof Free Standing Cabinet	42U	750	1130	2099

(X = Represents the particleboard color code; this information must be provided to the representative during the ordering process.)